TECHNICAL DATA SHEET **KARMA 6T**

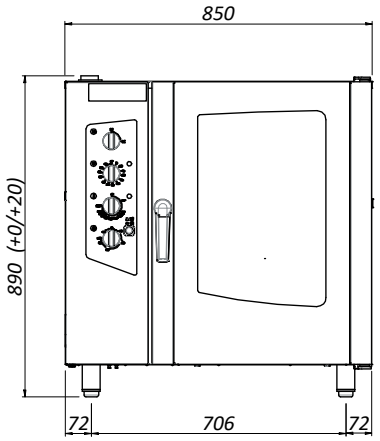

Front

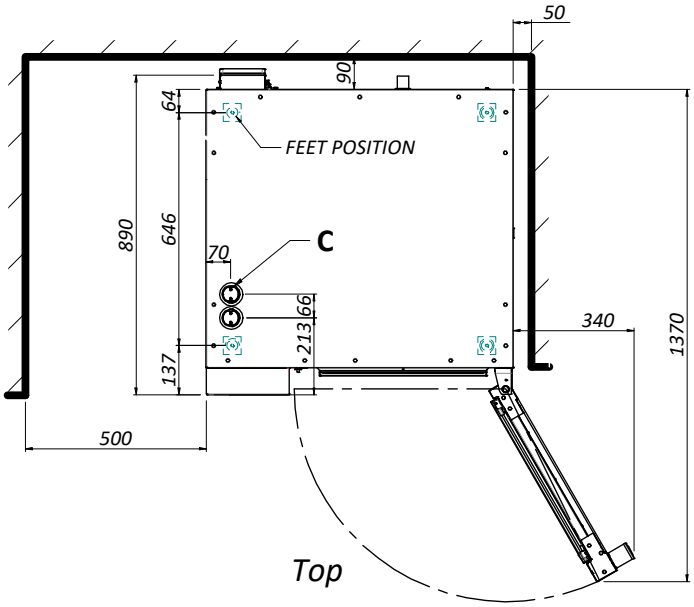

Top

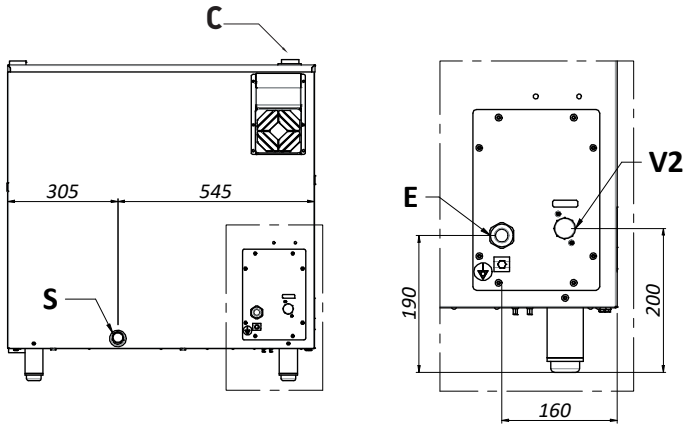

Back

C: Steam outlet chimney / Air inlet chimney
V2: Steam solenoid valve
E: Elettric connection
S: Drain water

Dimensions and weight

Oven width:	850 mm
Oven depth:	890 mm
Oven height:	890 mm
Net weight full optional:	90 kg
Packaging width:	915 mm
Packaging depth:	1000 mm
Packaging height:	1045 mm
Weight with packaging full optional:	108 kg
Packaging volume:	0.95 m^3

Installation

Minimum left side distance:	500 mm
Minimum right side distance:	50 mm
Minimum back distance:	50 mm
Min. distance from heat sources:	500 mm

Electrical connection

Supply:	380-415 V 3N 50/60 Hz 230 V 3P 50/60 Hz 230 V 1N 50/60 Hz
Max power:	11 kW
Current:	17 A 30 A 50 A
Cable:	5x4mm² H07RN-F

Water connection

Water wash connection V1:	3/4″
Steam water connection V2:	3/4″ softened
Water pressure:	1.5-5 bar
Water hardness:	4° d
Minimun Condutance:	50 µS/cm
Exhaust size S:	1″

Capacity

Trays type:	6040
Number of trays:	6
Distance between trays:	80 mm
Max load:	35 kg
Max load single tray:	5 kg
IP rating:	IPx4

Distributor:
KiD Catering Equipment, Oaktree Court Business Centre, Mill Lane, Ness, Cheshire, CH64 8TP
Tel: 0333 123 2450 sales@kidcateringequipment.com